PIEZUS

PRESSURE TRANSMITTER

APZ 2035

Operation Manual

www.piezus.ru

This manual covers mounting and operation of APZ 2035 differential pressure transmitter (hereinafter referred to as "transmitter" or "device"); it contains technical data, description of design and other information necessary for proper application and maintenance of the device.

See datasheets at http://piezus.ru for complete specifications.

Production regulated by TOR 4212-000-7722857693–2015.

Terms and abbreviations used in the manual:
Span – measurement range; NC - normally closed (NC contact); NO - normally open (NO contact); SW1, SW2 - switch contacts.

1 Purpose of the device

1.1 APZ 2035 differential pressure transmitter finds application in monitoring, protection, alarm and control systems in heat and power installations, air conditioning systems, various industrial environments and public utilities.

1.2 The device:
- proportionally and linearly converts measured differential pressure and outputs normalized voltage (0 ... 10 V) and current (4 ... 20 mA) signals;
- compares current pressure value to the preset thresholds and outputs two switching signals when the monitored parameter crosses those thresholds (as prescribed by the selected operation algorithm, hysteresis or window);
- shows current pressure value (in selected units) and discrete outputs status on the integrated digital display. Display and buttons allow quick reconfiguration of the device and eliminate the need to unmount it for that purpose.

1.3 Applications - heating, ventilation and air conditioning systems (HVAC/R):
- monitoring of flows in ventilation ducts;
- control of exhaust and discharge fans in air ducts;
- differential pressure control in filters
- air pressure control in clean rooms;
- air supply and fire flaps control;
- overheating protection for ventilation heaters;
- HVAC systems emergency control.

2 Technical specifications

2.1 General technical data

2.1.1 See transmitter's passport and label (sticker) for basic span and accuracy info.

2.1.2 You can set spans for the device with control buttons found on the front panel. See Table 1 for basic and optional spans.

Table 1 - Spans

Basic spans, Pa	-500…+500	-100…+2000	0…7000
Optional spans, Pa	-100…+100 -200…+200 0…100 0…200 0…500	-100…+100 0…100 0…200 0…500 0…1000 0…2000	0…1000 0…1500 0…2000 0…3000 0…5000
Burst pressure, kPa	±10	±30	±80
Burst pressure, kPa	±20	±40	±100

2.1.3 See Table 2 for output signal parameters.

Table 2 - Output parameters

Parameter		Value (properties)
Analog outputs:		
Number of measuring channels		2
Voltage (3-wire) / load resistance	output	0…10 V / ≥10 kOhm
Current (3-wire) / load resistance	output	4…20 mA / ≤ 500 Ohm
Switch outputs:		
Number of switch outputs		2 (independent)
Type of mechanical switch contact		nonbridging (NC and NO)
Max switching voltage		250 V (AC) / 30 V (DC)
Max switching current (contact type)		5 A (NO)/3 A (NC)
Switched signals (active load): - DC, voltage of 30 V - AC, voltage of 250 V		 5 A (NO)/3 A (NC) 5 A (NO)/3 A (NC)
Tripping threshold (configurable), % of span		0…100
Switch operating modes (configurable)		hysteresis/window
Switching accuracy		±0.7%

2.1.4. The device has a display, see Table 3 for its specifications.

Table 3 - Display specifications

Name	Value
Range of displayed values	-19999…+19999
Primary / secondary line height	15/7 mm
Displayed accuracy	0.1% of span ± low-order digit as % of span
Readings display time, max	0.2 s

2.1.5 DC power supply voltage ranges from 18 to 36 V (rated - 24 V), AC - 24 V ± 10%.

2.1.6 Consumed current/power, max - 100 mA/3.6 W.

2.1.7 Dimensions, max - 106 × 91 × 44 mm (Supplement A).

2.1.8 Weight, max - 0.25 kg.

2.1.9 Housing ingress protection (GOST 14254) - IP66.

2.2. Operating conditions:

2.2.1 The device was designed to operate in the following conditions:
- enclosed explosion-proof spaces free from aggressive vapors and gases;
- ambient temperature from -10 to +50 °C;
- medium temperature from -5 to + 65 °C;
- atmospheric pressure from 84 to 106.7 kPa.

2.2.2 Medium: air, non-flammable and non-aggressive gases.

2.2.3 Resistance to atmospheric pressure puts the device in group R1 under GOST R 52931 (max height above sea level - 1000 m).

2.2.4 Resistance to mechanical attack puts the device in group N2 under GOST R 52931.

2.3 Operating limitations:

- medium should be free from crystallizable impurities, contaminations and dust;
- medium should be free from flammable and aggressive gases and liquids.

3 Safety precautions

3.1 The electric shock hazard class of the device is III (no dangerous voltage); see GOST 12.2.007.0 for full classification.

3.2 Take measures to prevent moisture from getting into the housing.

3.3 Only qualified specialists that have read and understood this manual are allowed to mount, connect, adjust, do maintenance on the device.

4 Mounting and use

4.1 Mount the device onto a vertical surface through two Ø5 mm holes (see Supplement A). Make sure its pressure port and cable glands point downwards (to allow condensate draining).

4.2 See Figure 1 for circuits connection diagram (connected inside the housing via cable glands).

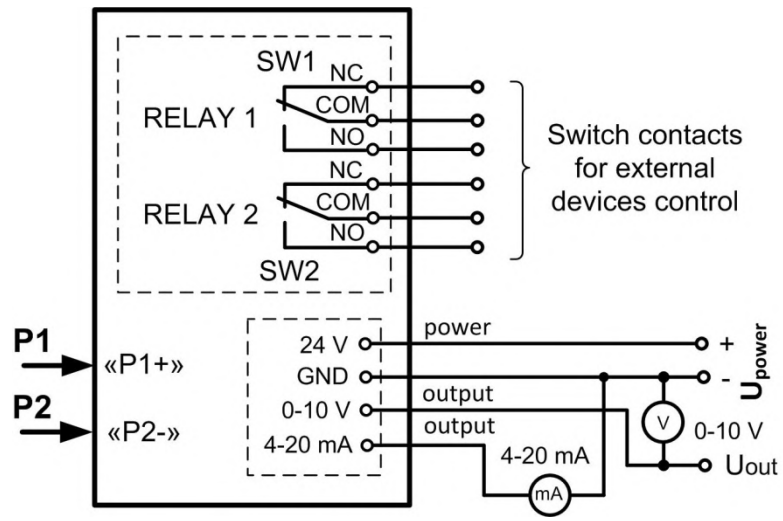

Figure 1 - Connection diagram; P1, P2 - inlet medium pressure, P1 (+) for higher pressure, P2 (-) for lower pressure.

Note: Always cut off power when connecting the device's circuits.

4.3 Use shielded copper cables (wire cross-section from 0.14 to 1.5 mm2) with insulating jacket when mounting the device.

4.4 We recommend using a circular cross-section wire to make the cable gland seal reliable; suggested outside diameters:
- for M16x1.5 - cable Ø6 ... 10 mm (power supply and output signal);
- for M20x1.5 - cable Ø7 ... 12.5 mm (switching lines).

Sealing cable gland with standard rings and gaskets is MANDATORY.

DO NOT:

1. **allow voltage exceeding maximum specified for the transmitter;**
2. **use any objects to touch or otherwise apply mechanical force to the diaphragm;**
3. **use transmitters bearing visible signs of mechanical damage;**
4. **use transmitters in inappropriate climatic conditions;**
5. **allow medium temperatures above or below the limits specified for the transmitter.**

5 Setup

5.1 There is a display and four buttons on the front panel of the device. See Figure 2 for their description.

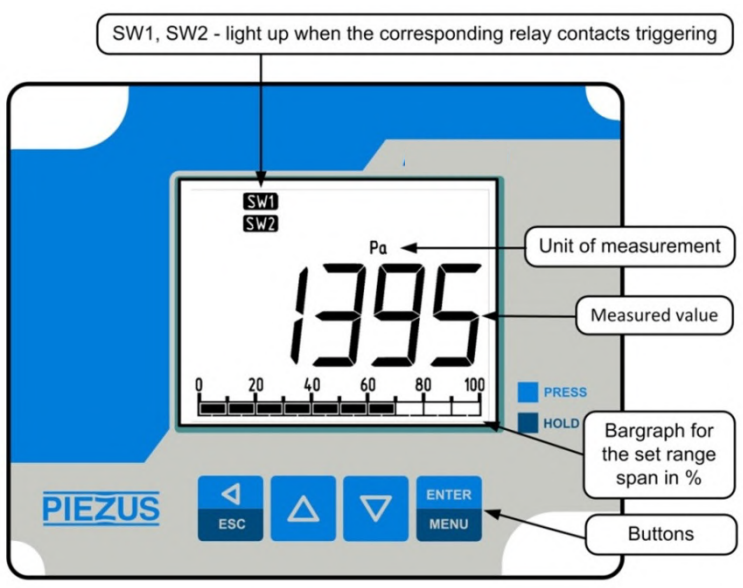

Figure 2 - Elements on the front panel of the device

5.2 Buttons allow changing the device's parameters when it is in use. For example, you can select units the measured pressure is displayed in, set switch thresholds, change span within the basic measurement range, adjust (calibrate) measurement results. See Setup instructions for procedures.

5.3 When switched on, the device self-tests. If everything is in working order, its output current and voltage signals are set linearly matching the measured pressure.

5.4 Malfunctions (related to data or system) are detected by the integrated controller. Detection of a system malfunction (at startup or during operation) results in outputting constant current (see Table 2).

6 Maintenance

Routine maintenance frequency - at least once a year; it includes checking reliability of mounting and removal of dust and dirt. Do not use chemical solvents and forced rinsing for cleaning purposes.

Routine checkups of the device in use follow data specified in its passport.

See the device's passport for its calibration interval and manufacturer's warranty.

Manufacturer refuses all claims, reclamations, complaints related to devices with damaged manufacturer seals and showing signs of damage resulting from inappropriate operation, transportation or storage.

All and any repairs are done by the manufacturer exclusively.

7 Marking

The device bears a label (sticker on the back of the housing) that contains the following information (Figure 3):

1) name of the manufacturer;
2) code of the device;
3) bar code (QR code);
4) output signals ranges;
5) supply voltage and its type;
6) serial number and production date;
7) electrical protection class (GOST 12.2.007.0);
8) ingress protection rate (GOST 14254);
9) measured pressure range.

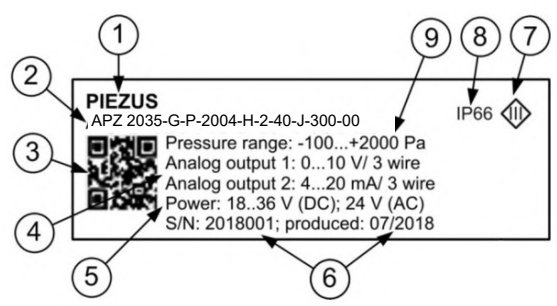

Figure 3 - Device label

8 Package contents

See Table 4 for delivery package contents.

Table 4 - Package contents

Name	Quantity
APZ 2035 differential pressure	1 pc
Passport	1 copy
User manual (this paper)	1 copy*
Setup Manual	1 copy*
* 1 copy per 10 devices for batch supplies to the same address.	

9 Transportation and storage

9.1 Use roofed transport to deliver the device to any destination needed; place individual packages into shipping containers if required.

9.2 Make sure the devices are protected from impacts and vibrations while in transit; permissible temperature for products transported in shipping containers ranges from -10 to +50 °C.

9.3 Store devices in shipping containers in a heated (+5 to 40 °C) ventilated space.

10 Resource and service life

10.1 Operating mode: continuous.

10.2 Mean time between failures, min – 120,000 h.

10.3 Service life - 12 years (normal working conditions: non-aggressive medium, temperature at +23 ± 3 °C, no vibrations and shaking).

11 Disposal

11.1 The device contains no precious metals.

11.2 Dispose of as prescribed by regulations adopted by the operator.

Supplement A

Design and dimensions

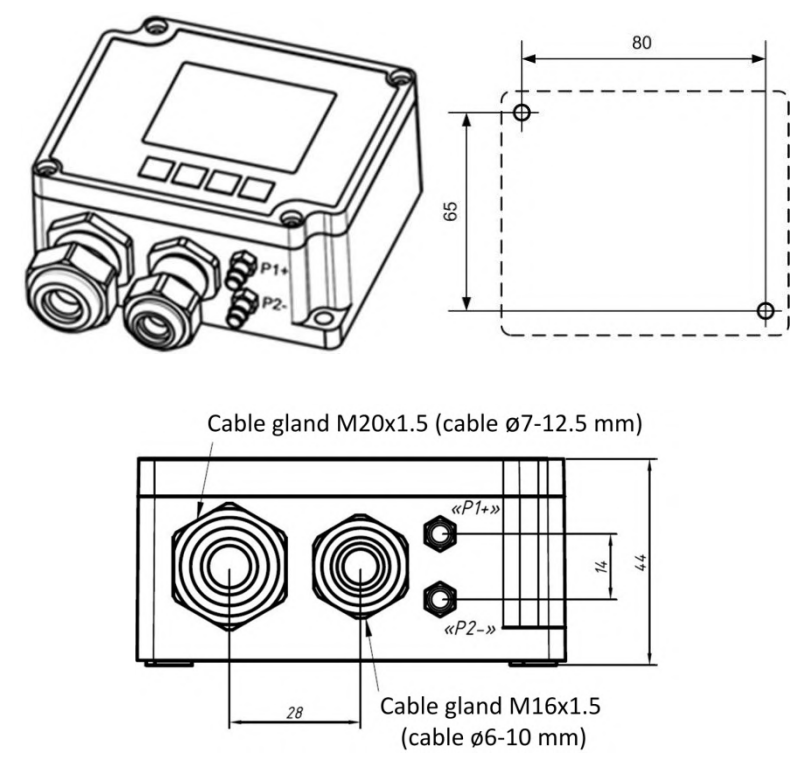

Figure A.1 - Housing and mounting holes

PIEZUS

Made in Russia

http://www.piezus.ru/

PIEZUS
PRESSURE TRANSMITTER

APZ 2035

Setup Manual

www.piezus.ru

This setup manual applies to APZ 2035 differential pressure transmitter. It is a supplement to the Operation Manual.

Terms and abbreviations used in the manual:
Span - measurement range;
URL - upper range limit;
LRL – lower range limit; SW1, SW2 – switch contacts 1 and 2.

1 General information

Depending on your goals and operating conditions you can change factory settings accordingly. Buttons described in Table 1 allow selecting operation algorithm and setting parameters.

Table 1 - Control buttons

Button	Action
ENTER MENU	ENTER / MENU - opens main menu (press and hold for 2 s) / cycles through main menu items or saves values to memory
△	Up - increases numerical values of parameters or changes units of measurement when in operating mode (Table 2)
▽	Down - decreases numerical values of parameters or changes units of measurement when in operating mode (Table 2)
◁ ESC	ESC - selects editing mode (values changing) for main menu items / cancels changes made; hold for 2 s to leave menu

See Table 2 for the available units of measurement.

Table 2 - Units of Measurement

Displayed	Unit of measurement
Pa	pascal (Pa) – factory settings
kPa	kilopascal (kPa)
mbar	millibar (mbar)
Bar	bar
mWc	meter of water column (at 20 C)
kgf/cm2	kilogram force per square centimeter
PSI	pounds per square inch

See section 3 of Supplement A for available programming instructions.

2 Factory settings

The standard settings are as follows.

- output signal increases linearly, in proportion to inlet pressure;
- pressure unit of measurement - Pa;
- switch 1 operating mode - WINDOW;
- switch 2 operating mode - HYSTERESIS;
- switch 1 upper level / switch 2 trigger level (switching-on) - 67% / 75% of span;
- switch 1 lower level / switch 2 trigger level (switching-off) - 33% / 25% of span;
- switching-on delay (affects both switches) - 0 ms.

To see the settings of the connected transmitter, press and hold ENTER / MENU button for 2 s. The display will show current settings and switch to the SET mode. Press the button again to browse the menu.

3 Setting up operation parameters

3.1 Press ENTER / MENU button and hold it for 2 s to enter the setup mode.

3.2 There appears the word SET in the top left corner; top right corner has the name of the parameter, below it - its code or value (Figure 1).

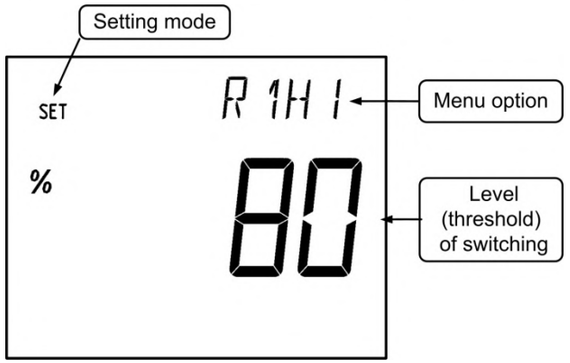

Figure 1 - Displayed elements
Operation parameters setup mode
(R1HI – signal threshold for SW1 switch contacts activation)

Press ENTER / MENU button to browse the parameters. Press ESC to edit a parameter; its code or value starts flashing.

Press UP and DOWN buttons to change code/value; press and hold any of them to have the figure change rapidly in the appropriate direction, release when the desired value is on the display.

Note: acceleration of the value increase or decrease grows gradually when you hold UP or DOWN button.

Press ENTER / MENU to save the desired value.

3.3 The device switches back to operation mode automatically after 10 seconds of inactivity.

Supplement A

Setup menu

See Table A.1 for all programmable parameters.

Table A.1 - Programmable parameters

Menu item	Function
PSEL	Span values modification. See Table A.2 for span codes; enter the appropriate code to set the desired span.
RESP	Response delay (affects both switches) in seconds. Values - from 0 to 9 seconds.
R1Md	Switch 1 mode selection (figure A.2): 0 - disabled; 1 - HYSTERESIS; 2 - WINDOW
R1HI	Switch 1: switching-on threshold / upper limit (contacts SW1). Values - from 0 to 100% of span.
R1LO	Switch 1: switching-off threshold / lower limit (contacts SW1). Values - from 0 to 100% of span.
R2Md	Switch 2 mode selection (figure A.2): 0 - disabled; 1 - HYSTERESIS; 2 - WINDOW
R2HI	Switch 2: switching-on threshold / upper limit (contacts SW2). Values - from 0 to 100% of span.
R2LO	Switch 2: switching-off threshold / lower limit (contacts SW2). Values - from 0 to 100% of span.
ZERO	Password (123) protects this parameter from accidental change. The function eliminates asymmetry between channels that can appear in the long run. ZERO calibration starts with equalizing inlet pressure: P1+ and P2- are connected to each other or to atmospheric pressure or to a fixed pressure source that gives the value medium pressure should be checked against.

Switch response delay (RESP)

Switch response delay allows filtering out short-term pressure changes. The switch does not change its state during the delay time after the pressure has exceeded the threshold (Figure A.1).

Measurement range (PSEL)

Table A.2 contains span codes that can be applied; these spans fall within the default measurement range the transmitter was given at the factory following customer's instructions.

Supplement A - Continued

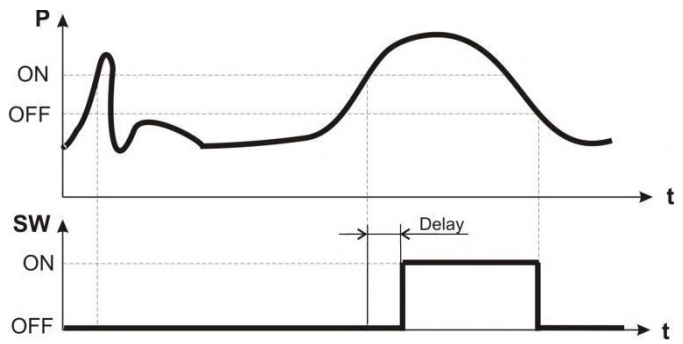

Figure A.1 - Switch response delay (SW contacts), HYSTERESIS mode, example

Table A.2 - Span codes (depend on the default measurement range set at the factory following customer's instructions)

PSEL parameter code	Default measurement range code (see label):		
	5002	**2004**	**7004**
0	-100 ... + 100 Pa	-100 ... + 100 Pa	0 ... 1000 Pa
1	-200 ... + 200 Pa	0 ... 100 Pa	0 ... 1500 Pa
2	-500 ... + 500 Pa	0 ... 200 Pa	0 ... 2000 Pa
3	0 ... 100 Pa	0 ... 500 Pa	0 ... 3000 Pa
4	0 ... 200 Pa	0 ... 1000 Pa	0 ... 5000 Pa
5	0 ... 500 Pa	0 ... 2000 Pa	0 ... 7000 Pa
6	-500 ... + 500 Pa	-100 ... + 2000 Pa	0 ... 7000 Pa

Switches 1, 2 operating modes (R1Md, R2Md)
HYSTERESIS or WINDOW modes are selected separately for each switch from the special menu. See graphs at Figure A.2 to understand the difference between these modes.

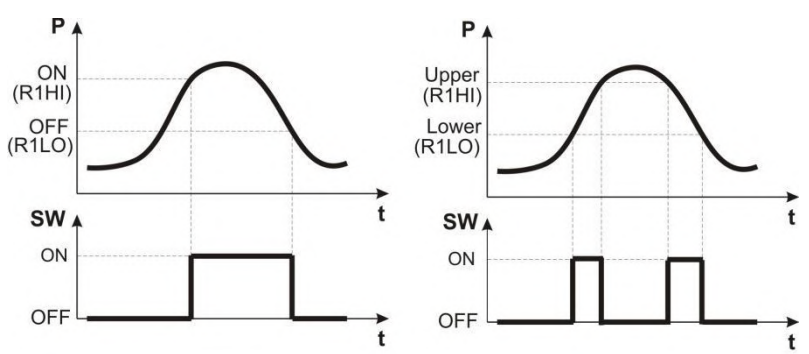

A) Hysteresis mode B) Window mode

Figure A.2 - Switching outputs operating modes (SW), inlet pressure (P) changes

See Supplement B for examples explaining the procedure of setting up the transmitter.

Supplement B

Programming examples

EXAMPLE 1 Changing the set range
1) Press and hold ENTER/MENU to enter the menu;
2) switch to PSEL by pressing ENTER/MENU;
3) press UP and DOWN to enter the span code (numeral from 0 to 6, where 6 is the default measurement range), see Table A.2 for codes descriptions;
4) press ENTER/MENU to save the selected span;
5) press and hold ESC to exit the menu.

EXAMPLE 2 Setting the switch response delay

1) Press and hold ENTER/MENU to enter the menu;
2) switch to RESP by pressing DOWN;
3) enter RESP editing mode by pressing ENTER/MENU;
4) press UP and DOWN to set the delay (in seconds, affects both switches);
5) press ENTER/MENU to save the setting;
6) press and hold ESC to exit the menu.

EXAMPLE 3 Selecting switch operation mode
1) Press and hold ENTER/MENU to enter the menu;
2) press DOWN twice to select R1Md item;
3) enter R1Md editing mode by pressing ENTER/MENU;
4) use UP and DOWN buttons to select switch operation mode (0 - disabled, 1 - HYSTERESIS, 2 - WINDOW);
5) press ENTER/MENU to save the setting;
6) press and hold ESC to exit the menu.

Supplement B - Continued

EXAMPLE 4 Setting upper threshold for switch 1
1) Press and hold ENTER/MENU to enter the menu;
2) press DOWN thrice to select R1HI item;
3) enter R1HI editing mode by pressing ENTER/MENU;
4) press ESC to select digit to edit;
5) press UP and DOWN to set the value;
6) press ENTER/MENU to save the setting;
7) press and hold ESC to exit the menu.

EXAMPLE 5 Zero calibration
1) Press and hold ENTER/MENU to enter the menu;
2) press DOWN eight times to select ZERO item;
3) enter ZERO editing mode by pressing ENTER/MENU - display shows "122";
4) press UP to change it to "123";
5) calibrate zero by pressing ENTER/MENU - display shows "122" again;
6) press and hold ESC to exit the menu.
